MIAMI-DADE COUNTY
DEPARTMENT OF REGULATORY AND ECONOMIC RESOURCES (RER)
BOARD AND CODE ADMINISTRATION DIVISION

MIAMI-DADE COUNTY
PRODUCT CONTROL SECTION
11805 SW 26 Street, Room 208
T (786) 315-2590 F (786) 315-2599
www.miamidade.gov/economy

NOTICE OF ACCEPTANCE (NOA)

WinDoor, Inc.
7500 Amsterdam Drive
Orlando, FL 32832

SCOPE:

This NOA is being issued under the applicable rules and regulations governing the use of construction materials. The documentation submitted has been reviewed and accepted by Miami-Dade County RER - Product Control Section to be used in Miami Dade County and other areas where allowed by the Authority Having Jurisdiction (AHJ).

This NOA shall not be valid after the expiration date stated below. The Miami-Dade County Product Control Section (In Miami Dade County) and/or the AHJ (in areas other than Miami Dade County) reserve the right to have this product or material tested for quality assurance purposes. If this product or material fails to perform in the accepted manner, the manufacturer will incur the expense of such testing and the AHJ may immediately revoke, modify, or suspend the use of such product or material within their jurisdiction. RER reserves the right to revoke this acceptance, if it is determined by Miami-Dade County Product Control Section that this product or material fails to meet the requirements of the applicable building code.

This product is approved as described herein, and has been designed to comply with the Florida Building Code, including the High Velocity Hurricane Zone.

DESCRIPTION: Series "450" Clipped Mullion - L.M.I..

APPROVAL DOCUMENT: Drawing No. MD-450MULL, titled "450 Clipped Mullion", sheets 1 through 9 of 9, dated 06/03/2020, prepared by manufacturer, signed and sealed by Anthony Lynn Miller, P.E., bearing the Miami-Dade County Product Control Revision stamp with the Notice of Acceptance number and expiration date by the Miami-Dade County Product Control Section..

MISSILE IMPACT RATING: Large and Small Missile Impact Resistant

LABELING: Each unit shall bear a permanent label with the manufacturer's name or logo, city, state, model/series, and following statement: "Miami-Dade County Product Control Approved", unless otherwise noted herein.

RENEWAL of this NOA shall be considered after a renewal application has been filed and there has been no change in the applicable building code negatively affecting the performance of this product.

TERMINATION of this NOA will occur after the expiration date or if there has been a revision or change in the materials, use, and/or manufacture of the product or process. Misuse of this NOA as an endorsement of any product, for sales, advertising or any other purposes shall automatically terminate this NOA. Failure to comply with any section of this NOA shall be cause for termination and removal of NOA.

ADVERTISEMENT: The NOA number preceded by the words Miami-Dade County, Florida, and followed by the expiration date may be displayed in advertising literature. If any portion of the NOA is displayed, then it shall be done in its entirety.

INSPECTION: A copy of this entire NOA shall be provided to the user by the manufacturer or its distributors and shall be available for inspection at the job site at the request of the Building Official.

This NOA **revises and renews NOA#18-0926.14** and consists of this page 1 and evidence pages E-1, as well as approval document mentioned above.

The submitted documentation was reviewed by **Sifang Zhao, P.E.**

MIAMI-DADE COUNTY APPROVED

S.Z.

10/28/2020

WinDoor, Inc.

NOTICE OF ACCEPTANCE: EVIDENCE SUBMITTED

A. DRAWINGS

1. Manufacturer's die drawings and sections *(See **NOA#20-0610.09)***

2. Drawing No. MD-450MULL, titled "450 Clipped Mullion", sheets 1 through 9 of 9, dated 06/03/2020, prepared by manufacturer, signed and sealed by Anthony Lynn Miller, P.E.

B. TESTS *(See **NOA #20-0610.09)***

C. CALCULATIONS *(See **NOA #20-0610.09)***

D. QUALITY ASSURANCE

1. Miami-Dade Department of Regulatory and Economic Resources (RER).

E. MATERIAL CERTIFICATIONS *(See **NOA #20-0610.09)***

F. STATEMENTS *(See **NOA #20-0610.09)***

G. OTHERS

1. Private labeling agreement between WinDoor, Inc. and CGI Windows and Doors, Inc. document in conformance of RER guideline dated 09/12/2018.
(Submitted under NOA#18-0926.14)

2. Notice of Acceptance No. **18-0926.14**, issued to WinDoor for their Series Clipped, Extruded Aluminum Tube Mullion with #373 Framing Member – L.M.I., approved on 11/29/18 and expiring on 11/05/2021/21

3. NOA No. **20-0610.09** issued to CGI Windows & Doors for their Series "450" Clipped Mullion - L.M.I. approved on 09/24/20 and expiring on 10/05/26.

Sifang Zhao, P.E.
Product Control Examiner
NOA No. 20-0610.16
Expiration Date: October 05, 2026
Approval Date: October 28, 2020

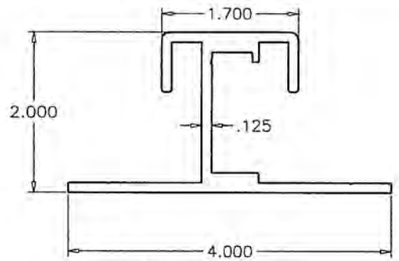

MULLION CLIP
CGI–395
6063–T6

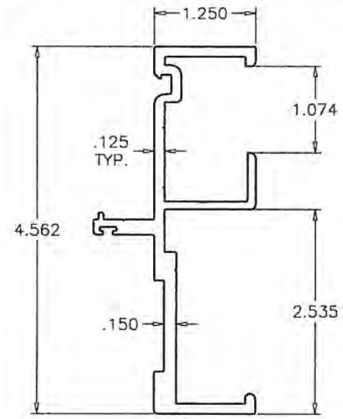

DOOR JAMB
CGI–509
6063–T6

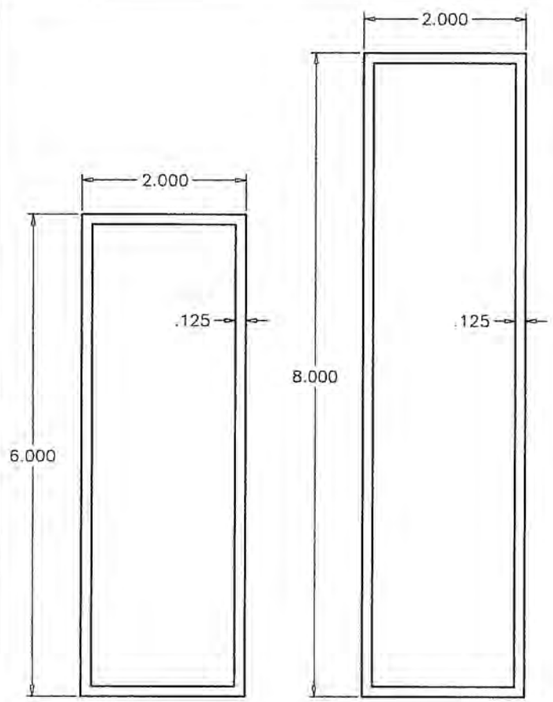

MULLION TUBES
6063–T6

THESE MULLIONS ARE RATED FOR LARGE & SMALL MISSILE IMPACT

SERIES '450' VERTICAL ALUMINUM TUBE MULLION DOOR FRAME MEMBER INCLUDED IN PROPERTIES

INSTRUCTIONS:

USE MULLION/ANCHOR CHART AS FOLLOWS.

STEP 1 DETERMINE DESIGN LOAD REQUIRED PER ASCE 7 FOR PARTICULAR OPENING.

STEP 2 USE CONNECTION TO MULLION AS PER THIS PRODUCT APPROVAL.

STEP 3 USING CHART SELECT ANCHORS WITH DESIGN RATING MORE THAN THE DESIGN LOAD SPECIFIED IN STEP 1 ABOVE.

STEP 4 CAPACITY OF SELECTED WINDOOR'S DOORS/SIDELITE/TRANSOM AND MULLION MUST EQUAL OR EXCEED REQUIRED LOADS.

THIS MULLION APPROVAL TO BE USED FOR MULLION AS SHOWN ON SHEET 5 AND MUST CONTAIN WINDOOR'S SWING DOORS, SIDELITES AND TRANSOMS AS DEPICTED.

NOTES:

THIS PRODUCT HAS BEEN DESIGNED AND TESTED TO COMPLY WITH THE REQUIREMENTS OF THE 2017 (6TH EDITION)/2020 (7TH EDITION) FLORIDA BUILDING CODE INCLUDING HIGH VELOCITY HURRICANE ZONE (HVHZ).

ALL GLAZING PRODUCTS USED WITH THESE MULLIONS MUST MEET THE APPLICABLE CODE REQUIREMENTS I.E.: WIND LOAD, WATER INFILTRATION, FORCED ENTRY RESISTANCE, SAFEGUARDS ETC.

1BY OR 2BY WOOD BUCKS & BUCK FASTENERS BY OTHERS, MUST BE DESIGNED AND INSTALLED ADEQUATELY TO TRANSFER APPLIED PRODUCT LOADS TO THE BUILDING STRUCTURE.

ANCHORS SHALL BE CORROSION RESISTANT, SPACED AS SHOWN ON DETAILS AND INSTALLED PER MANUF'S INSTRUCTIONS. SPECIFIED EMBEDMENT TO BASE MATERIAL SHALL BE BEYOND WALL DRESSING OR STUCCO.

A LOAD DURATION INCREASE IS USED IN DESIGN OF ANCHORS INTO WOOD ONLY.

ALL SHIMS TO BE HIGH IMPACT, NON–METALLIC AND NON–COMPRESSIBLE.

MATERIALS INCLUDING BUT NOT LIMITED TO STEEL/METAL SCREWS, THAT COME INTO CONTACT WITH OTHER DISSIMILAR MATERIALS SHALL MEET THE REQUIREMENTS OF THE 2017/2020 FLORIDA BLDG. CODE & ADOPTED STANDARDS.

THIS PRODUCT APPROVAL IS GENERIC AND DOES NOT PROVIDE INFORMATION FOR A SITE SPECIFIC PROJECT, i.e. LIFE SAFETY OF THIS PRODUCT, ADEQUACY OF STRUCTURE RECEIVING THIS PRODUCT AND SEALING AROUND OPENING FOR WATER INFILTRATION RESISTANCE ETC. CONDITIONS NOT SHOWN IN THIS DRAWING ARE TO BE ANALYZED SEPARATELY, AND TO BE REVIEWED BY BUILDING OFFICIAL.

PRODUCT REVISED
as complying with the Florida Building Code
NOA–No. 20-0610.16
Expiration Date 10/05/2026
By CJ
Miami–Dade Product Control

Revision: A) UPDATED TO FBC 2020. AK - 06/03/20

PREPARED BY A. LYNN MILLER
1070 TECHNOLOGY DRIVE
N. VENICE, FL 34275
(941) 480-1600
REGISTRATION #29296

WINDOOR® INCORPORATED
104 TRIPLE DIAMOND BLVD
NORTH VENICE, FL 34275
(407) 481-8400

Series	Title	Desc.	Scale	Sheet	DWG No.	Drawn By	Date	Rev.
450MULL	450 CLIPPED MULLION	EXTRUSIONS, INSTRUCTIONS, NOTES	NTS	1 OF 9	MD-450MULL	AGK	06/03/20	A

ANTHONY LYNN MILLER
LICENSE
No. 58705
6/5/20
STATE OF FLORIDA
PROFESSIONAL ENGINEER

A. LYNN MILLER, P.E.
P.E.# 58705

DESIGN LOAD CAPACITY - PSF. (2 X 6 X 1/8")							
NOMINAL DIMS.				1/4" ANCHORS		5/16" ANCHORS	
WIDTH (W1)	WIDTH (W2)	FRAME HEIGHT INCHES	DOOR HEIGHT INCHES	EXT.(+)	INT.(-)	EXT.(+)	INT.(-)
60	24	96	84	110.0	110.0	110.0	110.0
	30			108.5	108.5	110.0	110.0
	36			101.5	101.5	110.0	110.0
	42			95.3	95.3	106.3	106.3
72	24			102.3	102.3	110.0	110.0
	30			96.0	96.0	107.1	107.1
	36			90.4	90.4	100.9	100.9
	42			85.5	85.5	95.3	95.3
84	24			91.1	91.1	101.6	101.6
	30			86.1	86.1	96.0	96.0
	36			81.6	81.6	91.0	91.0
	42			77.5	77.5	86.5	86.5
60	24	102	84	110.0	110.0	110.0	110.0
	30			104.0	104.0	110.0	110.0
	36			97.1	97.1	108.3	108.3
	42			91.1	91.1	101.6	101.6
72	24			98.3	98.3	109.6	109.6
	30			92.1	92.1	102.7	102.7
	36			86.7	86.7	96.7	96.7
	42			81.8	81.8	91.3	91.3
84	24			87.6	87.6	97.7	97.7
	30			82.6	82.5	92.2	92.2
	36			78.2	78.2	87.3	87.3
	42			74.3	74.3	82.9	82.9
60	24	108	84	107.6	107.6	110.0	110.0
	30			99.8	99.8	110.0	110.0
	36			93.1	93.1	103.9	103.9
	42			87.3	87.3	97.3	97.3
72	24			94.5	94.5	105.5	105.5
	30			88.5	88.5	98.7	98.7
	36			83.2	83.2	92.8	92.8
	42			78.5	78.5	87.5	87.5
84	24			84.3	84.3	94.1	94.1
	30			79.5	79.5	88.7	88.7
	36			75.2	75.2	83.9	83.9
	42			71.3	71.3	79.5	79.5
60	24	114	84	103.6	103.6	110.0	110.0
	30			96.0	96.0	107.1	107.1
	36			89.5	89.5	99.8	99.8
	42			83.8	83.8	93.4	93.4
72	24			91.1	91.1	101.6	101.6
	30			85.2	85.2	95.0	95.0
	36			80.0	80.0	89.2	89.2
	42			75.4	75.4	84.1	84.1
84	24			81.3	81.3	90.7	90.7
	30			76.6	76.6	85.4	85.4
	36			72.3	72.3	60.7	80.7
	42			68.6	68.6	76.5	76.5
60	24	120	84	99.8	99.8	110.0	110.0
	30			92.4	92.4	103.1	103.1
	36			86.1	86.1	96.0	96.0
	42			80.5	80.5	89.8	89.8
72	24			87.9	87.9	98.0	98.0
	30			82.1	62.1	91.6	91.6
	36			77.0	77.0	85.9	85.9
	42			72.6	72.6	80.9	80.9
84	24			78.5	78.5	87.5	87.5
	30			73.8	73.8	82.4	82.4
	36			69.7	69.7	77.8	77.8
	42			66.0	66.0	73.7	73.7

DESIGN LOAD CAPACITY - PSF. (2 X 6 X 1/8")							
NOMINAL DIMS.				1/4" ANCHORS		5/16" ANCHORS	
WIDTH (W1)	WIDTH (W2)	FRAME HEIGHT INCHES	DOOR HEIGHT INCHES	EXT.(+)	INT.(-)	EXT.(+)	INT.(-)
60	24	126	84	96.4	96.4	106.5	106.5
	30			89.1	89.1	99.1	99.1
	36			82.9	82.9	92.5	92.5
	42			77.5	77.5	86.5	86.5
72	24			84.9	84.9	93.4	93.4
	30			79.2	79.2	87.7	87.7
	36			74.3	74.3	82.6	82.6
	42			69.9	69.9	78.0	78.0
84	24			75.9	75.9	83.1	83.1
	30			71.3	71.5	78.6	78.6
	36			67.3	67.3	74.5	74.5
	42			63.7	63.7	70.8	70.8
60	24	132	84	93.1	93.1	95.7	95.7
	30			86.1	86.1	89.2	89.2
	36			80.0	80.0	83.5	83.5
	42			74.7	74.7	78.5	78.5
72	24			82.1	82.1	93.9	83.9
	30			76.6	76.6	78.8	78.8
	36			71.7	71.7	74.3	74.3
	42			67.5	67.5	70.3	70.3
84	24			73.4	73.4	74.6	74.6
	30			69.0	69.0	70.6	70.6
	36			65.0	65.0	67.0	67.0
	42			61.5	61.5	63.7	63.7
60	24	138	84	86.7	86.7	86.7	86.7
	30			80.9	80.9	80.9	80.9
	36			75.7	75.7	75.7	75.7
	42			71.2	71.2	71.2	71.2
72	24			76.0	76.0	76.0	76.0
	30			71.4	71.4	71.4	71.4
	36			67.4	67.4	67.4	67.4
	42			63.8	63.8	63.8	63.8
84	24			67.6	67.6	67.6	67.6
	30			63.9	63.9	63.9	63.9
	36			60.7	60.7	60.7	60.7
	42			57.8	57.8	57.8	57.8
60	24	144	84	76.9	76.9	76.9	76.9
	30			71.3	71.3	71.3	71.3
	36			66.5	66.5	66.5	66.5
	42			62.3	62.3	62.3	62.3
72	24			67.6	67.6	67.5	67.6
	30			63.2	63.2	63.2	63.2
	36			59.4	59.4	59.4	59.4
	42			56.0	56.0	56.0	56.0
84	24			60.3	60.3	60.3	60.3
	30			56.8	56.8	56.8	56.8
	36			53.7	53.7	53.7	53.7
	42			50.9	50.9	50.9	50.9

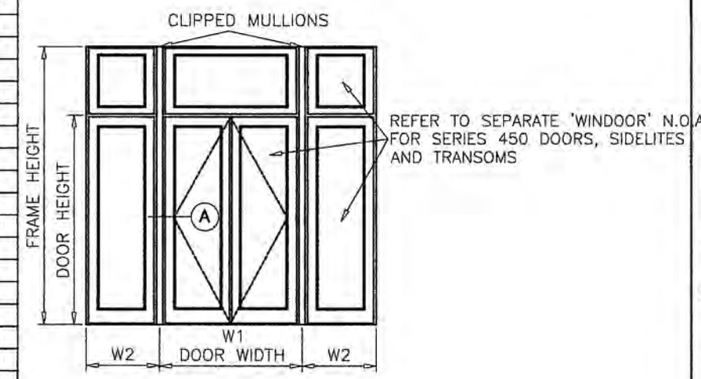

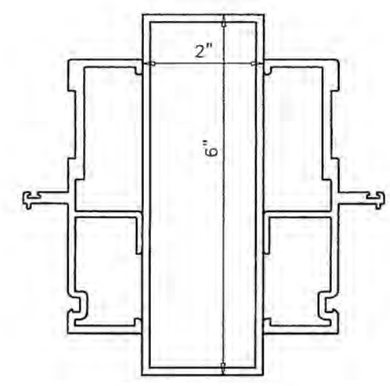

TOTAL PROPERTIES
Ix = 14.183 IN^4
Sx = 4.728 IN^3

LIMIT EXTERIOR LOADS TO +100 PSF FOR INSTALLATIONS WHERE WATER INFILTRATION RESISTANCE IS REQUIRED. SEE CHART ABOVE FOR INSTALLATIONS WHERE WATER INFILTRATION RESISTANCE IS NOT REQUIRED.

PRODUCT REVISED
as complying with the Florida Building Code
NOA-No. 20-0610.16
Expiration Date 10/05/2026
By
Miami-Dade Product Control

Revision:
A) NO CHANGES THIS SHEET.
AK - 06/03/20

PREPARED BY A. LYNN MILLER
1070 TECHNOLOGY DRIVE
N. VENICE, FL 34275
(941) 480-1600
REGISTRATION #29296

WINDOOR®
INCORPORATED
104 TRIPLE DIAMOND BLVD
NORTH VENICE, FL 34275
(407) 481-8400

Series	Title	Scale	Sheet	DWG No.	Drawn By	Date	Rev.
450MULL	450 CLIPPED MULLION MULLION LOAD CHARTS	NTS	2 OF 9	MD-450MULL	AGK	06/03/20	A

ANTHONY LYNN MILLER
LICENSE
No. 58705
STATE OF FLORIDA
PROFESSIONAL ENGINEER

A. LYNN MILLER, P.E.
P.E.# 58705

DESIGN LOAD CAPACITY - PSF. (2 X 6 X 1/8")							
NOMINAL DIMS.				1/4" ANCHORS		5/16" ANCHORS	
WIDTH (W1)	WIDTH (W2)	FRAME HEIGHT INCHES	DOOR HEIGHT INCHES	EXT.(+)	INT.(-)	EXT.(+)	INT.(-)
60	24	108	96	103.1	103.1	110.0	110.0
	30			96.0	96.0	107.1	107.1
	36			89.8	89.8	100.1	100.1
	42			84.3	84.3	94.1	94.1
72	24			90.4	90.4	100.9	100.9
	30			84.9	84.9	94.7	94.7
	36			80.0	80.0	89.2	89.2
	42			75.6	75.6	84.4	84.4
84	24			80.5	80.5	89.8	89.8
	30			76.1	76.1	84.9	84.9
	36			72.1	72.1	80.5	80.5
	42			68.6	68.6	76.5	76.5
60	24	114	96	99.4	99.4	110.0	110.0
	30			92.4	92.4	103.1	103.1
	36			86.4	86.4	96.3	96.3
	42			81.0	81.0	90.4	90.4
72	24			87.3	87.3	97.3	97.3
	30			81.8	81.8	91.3	91.3
	36			77.0	77.0	85.9	85.9
	42			72.8	72.8	81.2	81.2
84	24			77.8	77.8	86.7	86.7
	30			73.4	73.4	81.9	81.9
	36			69.5	69.5	77.5	77.5
	42			66.0	66.0	73.7	73.7
60	24	120	96	96.0	96.0	107.1	107.1
	30			89.1	89.1	99.4	99.4
	36			83.2	83.2	92.8	92.8
	42			78.0	78.0	87.0	87.0
72	24			84.3	84.3	94.1	94.1
	30			79.0	79.0	88.1	88.1
	36			74.3	74.3	82.9	82.9
	42			70.1	70.1	78.2	78.2
84	24			75.2	75.2	83.9	83.9
	30			70.9	70.9	79.1	79.1
	36			67.1	67.1	74.8	74.8
	42			63.7	63.7	71.0	71.0
60	24	126	96	92.8	92.8	103.5	103.5
	30			86.1	86.1	96.0	96.0
	36			80.3	80.3	89.5	89.5
	42			75.2	75.2	83.9	83.9
72	24			81.6	81.6	91.0	91.0
	30			76.3	76.3	85.1	85.1
	36			71.7	71.7	80.0	80.0
	42			67.6	67.6	75.4	75.4
84	24			72.8	72.8	81.2	81.2
	30			68.6	68.6	76.5	76.5
	36			64.8	64.8	72.3	72.3
	42			61.5	61.5	68.6	68.6
60	24	132	96	89.8	89.8	99.2	99.2
	30			83.2	83.2	92.1	92.1
	36			77.5	77.5	85.9	85.9
	42			72.6	72.6	80.5	80.5
72	24			79.0	79.0	87.1	87.1
	30			73.8	73.8	81.6	81.6
	36			69.3	69.3	76.7	76.7
	42			65.3	65.3	72.4	72.4
84	24			70.5	70.5	77.7	77.7
	30			66.4	66.4	73.2	73.2
	36			62.7	62.7	69.3	69.3
	42			59.4	59.4	65.8	65.8

DESIGN LOAD CAPACITY - PSF. (2 X 6 X 1/8")							
NOMINAL DIMS.				1/4" ANCHORS		5/16" ANCHORS	
WIDTH (W1)	WIDTH (W2)	FRAME HEIGHT INCHES	DOOR HEIGHT INCHES	EXT.(+)	INT.(-)	EXT.(+)	INT.(-)
60	24	138	96	87.0	87.0	88.9	88.9
	30			80.5	80.5	82.6	82.6
	36			75.0	75.0	77.2	77.2
	42			70.1	70.1	72.5	72.5
72	24			76.6	76.6	78.0	78.0
	30			71.5	71.5	73.2	73.2
	36			67.1	67.1	68.9	68.9
	42			63.2	63.2	65.1	65.1
84	24			68.4	68.4	69.5	69.5
	30			64.3	64.3	65.6	65.6
	36			60.7	60.7	62.2	62.2
	42			57.5	57.5	59.0	59.0
60	24	144	96	80.4	80.4	80.4	80.4
	30			74.7	74.7	74.7	74.7
	36			69.4	69.4	69.4	69.4
	42			64.8	64.8	64.8	64.8
72	24			70.5	70.5	70.5	70.5
	30			66.1	66.1	66.1	66.1
	36			62.2	62.2	62.2	62.2
	42			58.5	58.5	58.5	58.5
84	24			62.7	62.7	62.7	62.7
	30			59.3	59.3	59.3	59.3
	36			56.2	56.2	56.2	56.2
	42			53.3	53.3	53.3	53.3

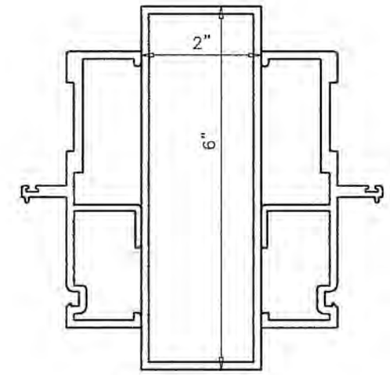

TOTAL PROPERTIES
Ix = 14.183 IN^4
Sx = 4.728 IN^3

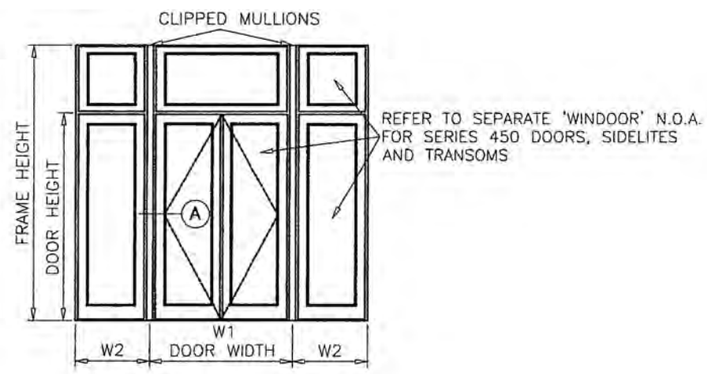

LIMIT EXTERIOR LOADS TO +100 PSF FOR INSTALLATIONS WHERE WATER INFILTRATION RESISTANCE IS REQUIRED. SEE CHART ABOVE FOR INSTALLATIONS WHERE WATER INFILTRATION RESISTANCE IS NOT REQUIRED.

PRODUCT REVISED
as complying with the Florida Building Code
NOA-No. 20-0610.16
Expiration Date 10/05/2026
By CJ
Miami-Dade Product Control

Revision:
A) NO CHANGES THIS SHEET.
AK - 06/03/20

PREPARED BY A. LYNN MILLER
1070 TECHNOLOGY DRIVE
N. VENICE, FL 34275
(941) 480-1600
REGISTRATION #29296

WINDOOR®
INCORPORATED
104 TRIPLE DIAMOND BLVD
NORTH VENICE, FL 34275
(407) 481-8400

Series	Title	Scale	Sheet	DWG No.	Drawn By	Date	Rev.
450MULL	450 CLIPPED MULLION	NTS	3 OF 9	MD-450MULL	AGK	06/03/20	A

Desc.: MULLION LOAD CHARTS

A. LYNN MILLER, P.E.
P.E.# 58705

DESIGN LOAD CAPACITY - PSF. (2 X 6 X 1/8")							
NOMINAL DIMS.				1/4" ANCHORS		5/16" ANCHORS	
WIDTH (W1)	WIDTH (W2)	FRAME HEIGHT INCHES	DOOR HEIGHT INCHES	EXT.(+)	INT.(-)	EXT.(+)	INT.(-)
60	24	120	108	92.4	92.4	103.1	103.1
	30			86.1	86.1	96.0	96.0
	36			80.5	80.5	89.8	89.8
	42			75.6	75.6	84.4	84.4
72	24			81.0	81.0	90.4	90.4
	30			76.1	76.1	84.9	84.9
	36			71.7	71.7	80.0	80.0
	42			67.8	67.8	75 .7	75.7
84	24			72.1	72.1	80.5	80.5
	30			68.2	68.2	76.1	76.1
	36			64.7	64.7	72.1	72.1
	42			61.5	61.5	68.6	68.6
60	24	126	108	89.5	89.5	99.8	99.8
	30			83.2	83.2	92.8	92.8
	36			77.8	77.8	86.7	86.7
	42			73.0	73.0	81.4	81.4
72	24			78.5	78.5	87.5	87.5
	30			73.6	73.6	82.1	82.1
	36			69.3	69.3	77.3	77.3
	42			65.5	65.5	73.1	73.1
84	24			69.9	69.9	78.0	78.0
	30			66.0	66.0	73.7	73.7
	36			62.6	62.6	69.8	69.8
	42			59.4	59.4	66.3	66.3
60	24	132	108	86.7	86.7	96.7	96.7
	30			80.5	80.5	89.8	89.8
	36			75.2	75.2	83.9	83.9
	42			70.5	70.5	78.6	78.6
72	24			76.1	76.1	84.9	84.9
	30			71.3	71.3	79.5	79.5
	36			67.1	67.1	74.8	74.8
	42			63.4	63.4	70.7	70.7
84	24			67.8	67.8	75.7	75.7
	30			64.0	64.0	71.4	71.4
	36			60.6	60.6	67.6	67.6
	42			57.5	57.5	64.1	64.1
60	24	138	108	84.0	84.0	93.5	93.5
	30			78.0	78.0	86.6	86.6
	36			72.8	72.8	80.6	80.6
	42			68.2	68.2	75.3	75.3
72	24			73.8	73.8	62.4	82.4
	30			69.1	69.1	75.9	76.9
	36			65.0	65.0	72.1	72.1
	42			61.3	61.3	67.9	67.9
84	24			65.9	65.9	73.5	73.5
	30			62.1	62.1	69.2	69.2
	36			58.7	58.7	65.3	65.3
	42			55.7	55.7	61.8	61.8
60	24	144	108	81.6	81.6	83.6	83.6
	30			75.6	75.6	77.5	77.5
	36			70.5	70.5	72.2	72.2
	42			66.0	66.0	67.7	67.7
72	24			71.7	71.7	73.5	73.5
	30			67.1	67.1	68.7	68.7
	36			63.0	63.0	64.6	64.6
	42			59.4	59.4	60.9	60.9
84	24			64.0	64.0	65.6	65.6
	30			60.3	60.3	61.8	61.8
	36			57.0	57.0	58.4	58.4
	42			54.0	54.0	55.4	55.4

DESIGN LOAD CAPACITY - PSF. (2 X 6 X 1/8")							
NOMINAL DIMS.				1/4" ANCHORS		5/16" ANCHORS	
WIDTH (W1)	WIDTH (W2)	FRAME HEIGHT INCHES	DOOR HEIGHT INCHES	EXT.(+)	INT.(-)	EXT.(+)	INT.(-)
60	24	132	120	83.8	83.8	93.4	93.4
	30			78.0	78.0	87.0	87.0
	36			73.0	73.0	81.4	81.4
	42			68.6	68.6	76.5	76.5
72	24			73.4	73.4	81.8	81.9
	30			69.0	69.0	76.9	76.9
	36			65.0	65.0	72.5	72.5
	42			61.5	61.5	68.6	68.6
84	24			65..3	65.3	72.9	72.9
	30			61.8	61.8	68.9	68.9
	36			58.6	58.6	65.4	65.4
	42			55.7	55.7	62.1	62.1
60	24	138	120	81.3	81.3	90.7	90.7
	30			75.6	75.6	84.4	84.4
	36			70.7	70.7	78.9	78.9
	42			66.4	66.4	74.0	74.0
72	24			71.3	71.3	79.5	79.5
	30			66.9	66 .9	74.6	74.6
	36			6.3.0	63 .0	70.3	70.3
	42			59.6	59.6	66.4	66.4
84	24			63.5	63.5	70.8	70.8
	30			60.0	60.0	66.9	66.9
	36			56.9	56 .9	63.4	63.4
	42			54.0	54.0	60.3	60.3
60	24	144	120	79.0	79.0	88.1	88.1
	30			73.4	73.4	81.9	81.9
	36			68.6	68.6	76.3	76.3
	42			64.3	64.3	71.1	71.1
72	24			69.3	69.3	77.3	77.3
	30			65.0	65.0	72.5	72.5
	36			61.2	61.2	68.2	68.2
	42			57.8	57.8	64.4	64.4
84	24			61.8	61.8	68.9	68.9
	30			56.3	58.6	65.0	65.0
	36			55.2	55.2	61.6	61.6
	42			52.4	52.4	58.5	58.5

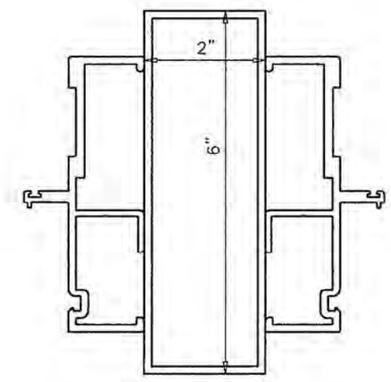

TOTAL PROPERTIES
Ix = 14.183 IN^4
Sx = 4.728 IN^3

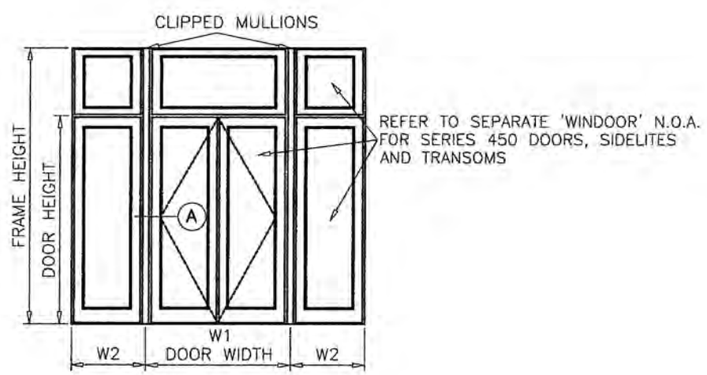

LIMIT EXTERIOR LOADS TO +100 PSF FOR INSTALLATIONS WHERE WATER INFILTRATION RESISTANCE IS REQUIRED. SEE CHART ABOVE FOR INSTALLATIONS WHERE WATER INFILTRATION RESISTANCE IS NOT REQUIRED.

PRODUCT REVISED
as complying with the Florida Building Code
NOA-No. 20-0610.16
Expiration Date 10/05/2026
By
Miami-Dade Product Control

Revision:
A) NO CHANGES THIS SHEET.
AK - 06/03/20

PREPARED BY A. LYNN MILLER
1070 TECHNOLOGY DRIVE
N. VENICE, FL 34275
(941) 480-1600
REGISTRATION #29296

WINDOOR®
INCORPORATED
104 TRIPLE DIAMOND BLVD
NORTH VENICE, FL 34275
(407) 481-8400

Desc.	MULLION LOAD CHARTS	Date	06/03/20	Rev.	A
Title	450 CLIPPED MULLION	Drawn By	AGK	DWG No.	MD-450MULL
Series	450MULL	Scale	NTS	Sheet	4 OF 9

ANTHONY LYNN MILLER
LICENSE
No. 58705
STATE OF FLORIDA
PROFESSIONAL ENGINEER

A. LYNN MILLER, P.E.
P.E.# 58705

DESIGN LOAD CAPACITY - PSF. (2 X 8 X 1/8")							
NOMINAL DIMS.				1/4" ANCHORS		5/16" ANCHORS	
WIDTH (W1)	WIDTH (W2)	FRAME HEIGHT INCHES	DOOR HEIGHT INCHES	EXT.(+)	INT.(-)	EXT.(+)	INT.(-)
60	24	96	84	110.0	110.0	110.0	110.0
	30			108.5	108.5	110.0	110.0
	36			101.5	101.5	110.0	110.0
	42			95.3	95.3	106.3	106.3
72	24			102.3	102.3	110.0	110.0
	30			96.0	96.0	107.1	107.1
	36			90.4	90.4	100.9	100.9
	42			85.5	85.5	95.3	95.3
84	24			91.1	91.1	101.6	101.6
	30			86.1	86.1	96.0	96.0
	36			81.6	81.6	91.0	91.0
	42			77.5	77.5	86.5	86.5
60	24	102	84	110.0	110.0	110.0	110.0
	30			104.0	104.0	110.0	110.0
	36			97.1	97.1	108.3	108.3
	42			91.1	91.1	101.6	101.6
72	24			98.3	98.3	109.6	109.6
	30			92.1	92.1	102.7	102.7
	36			86.7	86.7	96.7	96.7
	42			81.8	81.8	91.3	91.3
84	24			87.6	87.6	97.7	97.7
	30			82.6	82.6	92.2	92.2
	36			78.2	78.2	87.3	87.3
	42			74.3	74.3	82.9	82.9
60	24	108	84	107.6	107.6	110.0	110.0
	30			99.8	99.8	110.0	110.0
	36			93.1	93.1	103.9	103.9
	42			87.3	87.3	97.3	97.3
72	24			94.5	94.5	105.5	105.5
	30			88.5	88.5	98.7	98.7
	36			83.2	83.2	92.8	92.8
	42			78.5	78.5	87.5	87.5
84	24			84.3	84.3	94.1	94.1
	30			79.5	79.5	88.7	88.7
	36			75.2	75.2	83.9	83.9
	42			71.3	71.3	79.5	79.5
60	24	114	84	103.6	103.6	110.0	110.0
	30			96.0	96.0	107.1	107.1
	36			89.5	89.5	99.8	99.8
	42			83.8	83.8	93.4	93.4
72	24			91.1	91.1	101.6	101.6
	30			85.2	85.2	95.0	95.0
	36			80.0	80.0	89.2	89.2
	42			75.4	75.4	84.1	84.1
84	24			81.3	81.3	90.7	90.7
	30			76.6	76.6	85.4	85.4
	36			72.3	72.3	80.7	80.7
	42			68.6	68.6	76.5	76.5
60	24	120	84	99.8	99.8	110.0	110.0
	30			92.4	92.4	103.1	103.1
	36			86.1	86.1	96.0	96.0
	42			80.5	80.5	89.8	89.8
72	24			87.9	87.9	98.0	98.0
	30			82.1	82.1	91.6	91.6
	36			77.0	77.0	85.9	85.9
	42			72.6	72.6	80.9	80.9
84	24			78.5	78.5	87.5	87.5
	30			73.8	73.8	82.4	82.4
	36			69.7	69.7	77.8	77.8
	42			66.0	66.0	73.7	73.7

DESIGN LOAD CAPACITY - PSF. (2 X 8 X 1/8")							
NOMINAL DIMS.				1/4" ANCHORS		5/16" ANCHORS	
WIDTH (W1)	WIDTH (W2)	FRAME HEIGHT INCHES	DOOR HEIGHT INCHES	EXT.(+)	INT.(-)	EXT.(+)	INT.(-)
60	24	126	84	96.4	95.4	107.5	107.5
	30			89.1	89.1	99.4	99.4
	36			82.9	62.9	92.5	92.5
	42			77.5	77.5	85.5	85.5
72	24			84.9	84.9	94.7	94.7
	30			79.2	79.2	88.4	88.4
	36			74.3	74.3	82.9	82.9
	42			69.9	59.9	78.0	78.0
84	24			75.9	75.9	84.5	84.6
	30			71.3	71.3	79.5	79.5
	36			67.3	67.3	75.0	75.0
	42			63.7	63.7	71.0	71.0
60	24	132	84	93.1	93.1	103.9	103.9
	30			86.1	86.1	96.0	96.0
	36			80.0	80.0	89.2	89.2
	42			74.7	74.7	83.4	83.4
72	24			82.1	82.1	91.6	91.6
	30			76.6	76.6	85.4	85.4
	36			71.7	71.7	80.0	80.0
	42			67.5	67.5	75.2	75.2
84	24			73.4	73.4	81.9	81.9
	30			69.0	69.0	76.9	76.9
	36			65.0	65.0	72.5	72.5
	42			61.5	61.5	68.6	68.6
60	24	138	84	90.1	90.1	100.5	100.5
	30			83.2	83.2	92.8	92.8
	36			77.3	77.3	86.2	86.2
	42			72.1	72.1	80.5	80.5
72	24			79.5	79.5	88.7	88.7
	30			74.1	74.1	82.6	82.6
	36			69.3	69.3	77.3	77.3
	42			65.2	65.2	72.7	72.7
84	24			71.1	71.1	79.3	79.3
	30			66.7	66.7	74.4	74.4
	36			62.9	62.9	70.1	70.1
	42			59.4	59.4	66.3	66.3
60	24	144	84	87.3	87.3	96.5	96.5
	30			80.5	80.5	89.8	89.8
	36			74.7	74.7	83.4	83.4
	42			69.7	69.7	77.8	77.8
72	24			77.0	77.0	84.5	84.5
	30			71.7	71.7	79.5	79.5
	36			67.1	67.1	74.8	74.8
	42			63.0	63.0	70.3	70.3
84	24			69.0	69.0	75.1	75.1
	30			64.7	64.7	71.1	71.1
	36			60.9	60.9	67.6	67.6
	42			57.5	57.5	64.1	64.1

LIMIT EXTERIOR LOADS TO +100 PSF FOR INSTALLATIONS WHERE WATER INFILTRATION RESISTANCE IS REQUIRED. SEE CHART ABOVE FOR INSTALLATIONS WHERE WATER INFILTRATION RESISTANCE IS NOT REQUIRED.

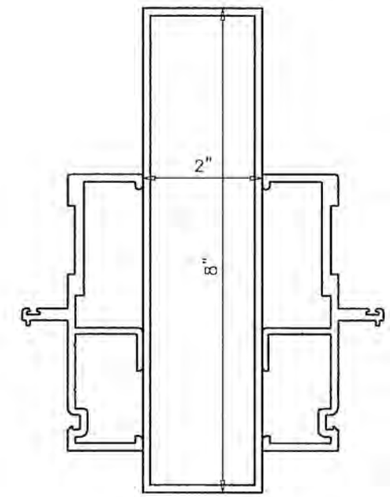

TOTAL PROPERTIES
Ix = 23.357 IN^4
Sx = 5.839 IN^3

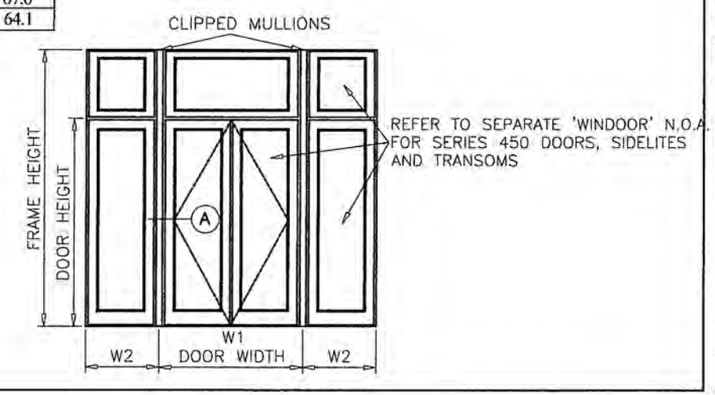

PRODUCT REVISED
as complying with the Florida Building Code
NOA–No. 20-0610.16
Expiration Date 10/05/2026
By
Miami–Dade Product Control

Revision: A) NO CHANGES THIS SHEET. AK - 06/03/20

PREPARED BY A. LYNN MILLER
1070 TECHNOLOGY DRIVE
N. VENICE, FL 34275
(941) 480-1600
REGISTRATION #29296

WINDOOR®
INCORPORATED
104 TRIPLE DIAMOND BLVD
NORTH VENICE, FL 34275
(407) 481-8400

Series	Title	Scale	Sheet	DWG No.	Drawn By	Date	Rev.
450MULL	450 CLIPPED MULLION	NTS	5 OF 9	MD-450MULL	AGK	06/03/20	A

Desc.: MULLION LOAD CHARTS

ANTHONY LYNN MILLER
LICENSE
No. 58705
6/5/20
STATE OF FLORIDA
PROFESSIONAL ENGINEER

A. LYNN MILLER, P.E.
P.E.# 58705

DESIGN LOAD CAPACITY - PSF. (2 X 8 X 1/8")							
NOMINAL DIMS.				1/4" ANCHORS		5/16" ANCHORS	
WIDTH (W1)	WIDTH (W2)	FRAME HEIGHT INCHES	DOOR HEIGHT INCHES	EXT.(+)	INT.(-)	EXT.(+)	INT.(-)
60	24	108	96	103.1	103.1	110.0	110.0
	30			96.0	96.0	107.1	107.1
	36			89.8	89.8	100.1	100.1
	42			84.3	84.3	94.1	94.1
72	24			90.4	90.4	100.9	100.9
	30			84.9	84.9	94.7	94.7
	36			80.0	80.0	89.2	89.2
	42			75.6	75.6	84.4	84.4
84	24			80.5	80.5	89.8	89.8
	30			76.1	76.1	84.9	84.9
	36			72.1	72.1	80.5	80.5
	42			68.6	68.6	76.5	76.5
60	24	114	96	99.4	99.4	110.0	110.0
	30			92.4	92.4	103.1	103.1
	36			86.4	86.4	96.3	96.3
	42			81.0	81.0	90.4	90.4
72	24			87.3	87.3	97.3	97.3
	30			81.8	81.8	91.3	91.3
	36			77.0	77.0	85.9	85.9
	42			72.8	72.8	81.2	81.2
84	24			77.8	77.8	86.7	86.7
	30			73.4	73.4	81.9	81.9
	36			69.5	69.5	77.5	77.5
	42			66.0	66.0	73.7	73.7
60	24	120	96	96.0	96.0	107.1	107.1
	30			89.1	89.1	99.4	99.4
	36			83.2	83.2	92.8	92.8
	42			78.0	78.0	87.0	87.0
72	24			84.3	84.3	94.1	94.1
	30			79.0	79.0	88.1	88.1
	36			74.3	74.3	82.9	82.9
	42			70.1	70.1	78.2	78.2
84	24			75.2	75.2	83.9	83.9
	30			70.9	70.9	79.1	79.1
	36			67.1	67.1	74.6	74.8
	42			63.7	63.7	71.0	71.0
60	24	126	96	92.8	92.8	103.5	103.5
	30			86.1	86.1	96.0	96.0
	36			80.3	80.3	89.5	89.5
	42			75.2	75.2	83.9	83.9
72	24			81.6	81.6	91.0	91.0
	30			76.3	76.1	85.1	85.1
	36			71.7	71.7	80.0	80.0
	42			67.6	67.6	75.4	75.4
84	24			72.8	72.8	81.2	81.2
	30			68.6	68.6	76.5	76.5
	36			64.8	64.8	72.3	72.3
	42			61.5	61.5	68.6	68.6
60	24	132	96	89.8	89.8	100.1	100.1
	30			83.2	83.2	92.8	92.8
	36			77.5	77.5	86.5	86.5
	42			72.6	72.6	80.9	80.9
72	24			79.0	79.0	88.1	88.1
	30			73.8	73.8	82.4	82.4
	36			69.3	69.3	77.3	77.3
	42			65.3	65.3	72.9	72.9
84	24			70.5	70.5	78.6	78.6
	30			66.4	66.4	74.0	74.0
	36			62.7	62.7	69.9	69.9
	42			59.4	59.4	66.3	66.3

DESIGN LOAD CAPACITY - PSF. (2 X 8 X 1/8")							
NOMINAL DIMS.				1/4" ANCHORS		5/16" ANCHORS	
WIDTH (W1)	WIDTH (W2)	FRAME HEIGHT INCHES	DOOR HEIGHT INCHES	EXT.(+)	INT.(-)	EXT.(+)	INT.(-)
60	24	138	96	87.0	87.0	97.0	97.0
	30			80.5	80.5	89.8	89.8
	36			75.0	75.0	83.6	83.6
	42			70.1	70.1	78.2	78.2
72	24			76.6	76.6	85.4	85.4
	30			71.5	71.5	79.8	79.8
	36			67.1	67.1	74.8	74.8
	42			63.2	63.2	70.5	70.5
84	24			68.4	68.4	76.3	76.3
	30			64.3	64.3	71.8	71.8
	36			60.7	60.7	67.7	67.7
	42			57.5	57.5	64.1	64.1
60	24	144	96	84.3	84.3	94.1	94.1
	30			78.0	78.0	87.0	87.0
	36			72.6	72.6	80.9	80.9
	42			67.8	67.8	75.7	75.7
72	24			74.3	74.3	82.9	82.9
	30			69.3	69.3	77.3	77.3
	36			65.0	65.0	72.5	72.5
	42			61.2	61.2	68.2	68.2
84	24			66.4	66.4	74.0	74.0
	30			62.4	62.4	69.6	69.6
	36			58.9	58.9	65.7	65.7
	42			55.7	55.7	62.1	62.1

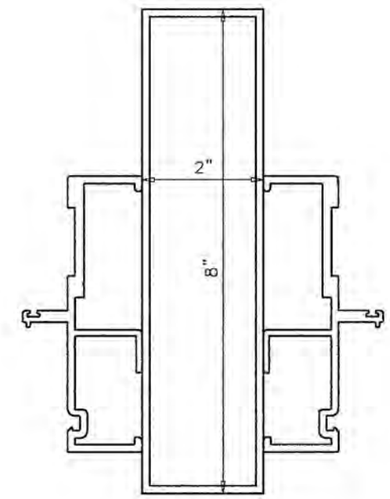

TOTAL PROPERTIES
Ix = 23.357 IN^4
Sx = 5.839 IN^3

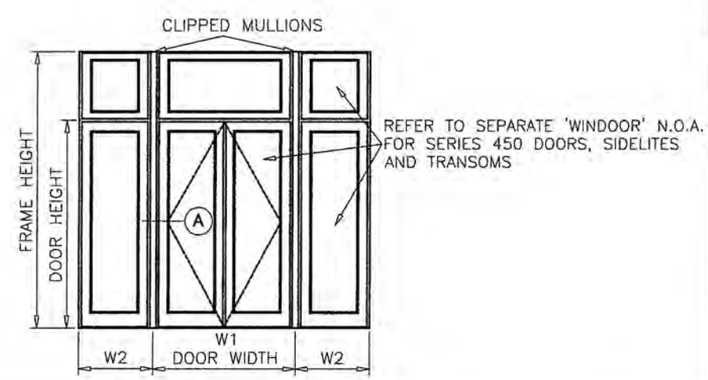

LIMIT EXTERIOR LOADS TO +100 PSF FOR INSTALLATIONS WHERE WATER INFILTRATION RESISTANCE IS REQUIRED. SEE CHART ABOVE FOR INSTALLATIONS WHERE WATER INFILTRATION RESISTANCE IS NOT REQUIRED.

PRODUCT REVISED
as complying with the Florida Building Code
NOA–No. 20-0610.16
Expiration Date 10/05/2026
By
Miami–Dade Product Control

Revision:
A) NO CHANGES THIS SHEET.
AK - 06/03/20

PREPARED BY A. LYNN MILLER
1070 TECHNOLOGY DRIVE
N. VENICE, FL 34275
(941) 480-1600
REGISTRATION #29296

WINDOOR®
INCORPORATED
104 TRIPLE DIAMOND BLVD
NORTH VENICE, FL 34275
(407) 481-8400

Desc.	Date	Drawn By	DWG No.	Rev.
MULLION LOAD CHARTS	06/03/20	AGK	MD-450MULL	A

Title	Scale	Sheet	Series
450 CLIPPED MULLION	NTS	6 OF 9	450MULL

ANTHONY LYNN MILLER
LICENSE
No. 58705
6/5/20
STATE OF FLORIDA
PROFESSIONAL ENGINEER

A. LYNN MILLER, P.E.
P.E.# 58705

DESIGN LOAD CAPACITY - PSF. (2 X 8 X 1/8")							
NOMINAL DIMS.				1/4" ANCHORS		5/16" ANCHORS	
WIDTH (W1)	WIDTH (W2)	FRAME HEIGHT INCHES	DOOR HEIGHT INCHES	EXT.(+)	INT.(-)	EXT.(+)	INT.(-)
60	24	120	108	92.4	92.4	103.1	103.1
	30			86.1	86.1	96.0	96.0
	36			80.5	80.5	89.8	89.8
	42			75.6	75.6	84.4	84.4
72	24			81.0	81.0	90.4	90.4
	30			76.1	76.1	84.9	84.9
	36			71.7	71.7	80.0	80.0
	42			67.8	67.8	75.7	75.7
84	24			72.1	72.1	80.5	80.5
	30			68.2	68.2	76.1	76.1
	36			64.7	64.7	72.1	72.1
	42			61.5	61.5	68.6	68.6
60	24	126	108	89.5	89.5	99.8	99.8
	30			83.2	83.2	92.8	92.8
	36			77.8	77.8	86.7	86.7
	42			73.0	73.0	81.4	81.4
72	24			78.5	78.5	87.5	87.5
	30			73.5	73.6	82.1	82.1
	36			69.3	69.3	77.3	77.3
	42			65.5	65.5	73.1	73.1
84	24			69.9	69.9	78.0	78.0
	30			66.0	66.0	73.7	73.7
	36			62.6	62.6	69.8	69.8
	42			59.4	59.4	66.3	66.3
60	24	132	108	86.7	86.7	96.7	96.7
	30			80.5	80.5	89.8	89.8
	36			75.2	75.2	83.9	83.9
	42			70.5	70.5	78.6	78.6
72	24			76.1	76.1	84.9	84.9
	30			71.3	71.3	79.5	79.5
	36			67.1	67.1	74.8	74.8
	42			63.4	63.4	70.7	70.7
84	24			67.8	67.8	75.7	75.7
	30			64.0	64.0	71.4	71.4
	36			60.6	60.6	67.6	67.6
	42			57.5	57.5	64.1	64.1
60	24	138	108	84.0	84.0	93.7	93.7
	30			78.0	78.0	87.0	87.0
	36			72.8	72.8	81.2	81.2
	42			68.2	68.2	76.1	76.1
72	24			73.8	73.8	82.4	82.4
	30			69.1	69.1	77.1	77.1
	36			65.0	65.0	72.5	72.5
	42			61.3	61.3	68.4	68.4
84	24			65.9	65.9	73.5	73.5
	30			62.1	62.1	69.3	69.3
	36			58.7	58.7	65.5	65.5
	42			55.7	55.7	62.1	62.1
60	24	144	108	81.6	81.6	91.0	91.0
	30			75.6	75.6	84.4	84.4
	36			70.5	70.5	78.6	78.6
	42			66.0	66.0	73.7	73.7
72	24			71.7	71.7	80.0	80.0
	30			67.1	67.1	74.8	74.8
	36			63.0	63.0	70.3	70.3
	42			59.4	59.4	66.3	66.3
84	24			64.0	64.0	71.4	71.4
	30			60.3	60.3	67.2	67.2
	36			57.0	57.0	63.6	63.6
	42			54.0	54.0	60.3	60.3

DESIGN LOAD CAPACITY - PSF. (2 X 8 X 1/8")							
NOMINAL DIMS.				1/4" ANCHORS		5/16" ANCHORS	
WIDTH (W1)	WIDTH (W2)	FRAME HEIGHT INCHES	DOOR HEIGHT INCHES	EXT.(+)	INT.(-)	EXT.(+)	INT.(-)
60	24	132	120	83.8	83.8	93.4	93.4
	30			78.0	78.0	87.0	87.0
	36			73.0	73.0	81.4	81.4
	42			68.6	68.6	76.5	76.5
72	24			73.4	73.4	81.9	81.9
	30			69.0	69.0	76.9	76.9
	36			65.0	65.0	72.5	72.5
	42			61.5	61.5	68.6	68.6
84	24			65.3	65.3	72.9	72.9
	30			61.8	61.8	68.9	68.9
	36			58.6	58.6	65.4	65.4
	42			55.7	55.7	62.1	62.1
60	24	138	120	81.3	81.3	90.7	90.7
	30			75.6	75.6	84.4	84.4
	36			70.7	70.7	78.9	78.9
	42			66.4	66.4	74.0	74.0
72	24			71.3	71.3	79.5	79.5
	30			66.9	66.9	74.6	74.6
	36			63.0	63.0	70.3	70.3
	42			59.6	59.6	66.4	66.4
84	24			63.5	63.5	70.8	70.8
	30			60.0	60.0	66.9	66.9
	36			56.9	56.9	63.4	63.4
	42			54.0	54.0	60.3	60.3
60	24	144	120	79.0	79.0	88.1	88.1
	30			73.4	73.4	81.9	81.9
	36			68.6	68.6	76.5	76.5
	42			64.3	64.3	71.8	71.8
72	24			69.3	69.3	77.3	77.3
	30			65.0	65.0	72.5	72.5
	36			61.2	61.2	68.2	68.2
	42			57.8	57.8	64.4	64.4
84	24			61.8	61.8	68.9	68.9
	30			58.3	58.3	65.0	65.0
	36			55.2	55.2	61.6	61.6
	42			52.4	52.4	58.5	58.5

LIMIT EXTERIOR LOADS TO +100 PSF FOR INSTALLATIONS WHERE WATER INFILTRATION RESISTANCE IS REQUIRED. SEE CHART ABOVE FOR INSTALLATIONS WHERE WATER INFILTRATION RESISTANCE IS NOT REQUIRED.

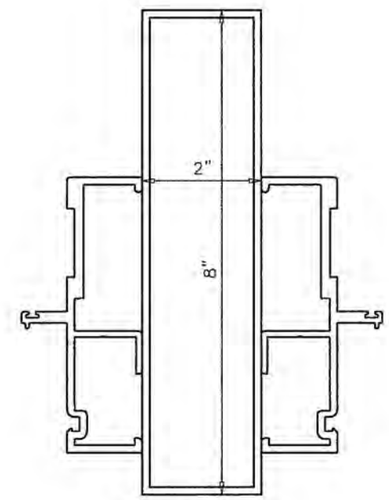

TOTAL PROPERTIES
Ix = 23.357 IN^4
Sx = 5.839 IN^3

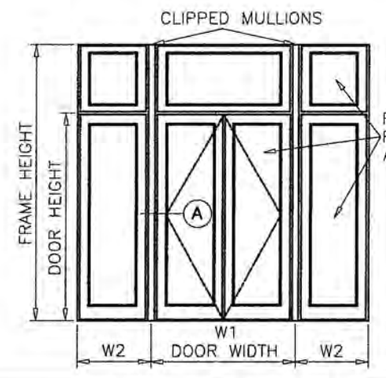

REFER TO SEPARATE 'WINDOOR' N.O.A. FOR SERIES 450 DOORS, SIDELITES AND TRANSOMS

PRODUCT REVISED
as complying with the Florida Building Code
NOA–No. 20-0610.16
Expiration Date 10/05/2026
By CJ
Miami–Dade Product Control

Revision: A) NO CHANGES THIS SHEET. AK - 06/03/20

PREPARED BY A. LYNN MILLER
1070 TECHNOLOGY DRIVE
N. VENICE, FL 34275
(941) 480-1600
REGISTRATION #29296

WINDOOR® INCORPORATED
104 TRIPLE DIAMOND BLVD
NORTH VENICE, FL 34275
(407) 481-8400

Series	Title Desc.	Scale	Sheet	DWG No.	Drawn By	Date	Rev.
450MULL	450 CLIPPED MULLION MULLION LOAD CHARTS	NTS	7 OF 9	MD-450MULL	AGK	06/03/20	A

ANTHONY LYNN MILLER LICENSE No. 58705 STATE OF FLORIDA PROFESSIONAL ENGINEER
6/5/20

A. LYNN MILLER, P.E.
P.E.# 58705

DESIGN LOAD CAPACITY - PSF									
L IN.	AVG. WIDTH IN.	2 X 6 X 1/8"				2 X 8 X 1/8"			
		1/4" DIA. ULTRACON		5/16" DIA. ULTRACON		1/4" DIA. ULTRACON		5/16" DIA. ULTRACON	
		EXT.(+)	INT.(-)	EXT.(+)	INT.(-)	EXT.(+)	INT.(-)	EXT.(+)	INT.(-)
84	24	110.0	110.0	110.0	110.0	110.0	110.0	110.0	110.0
	30	110.0	110.0	110.0	110.0	110.0	110.0	110.0	110.0
	36	110.0	110.0	110.0	110.0	110.0	110.0	110.0	110.0
	42	110.0	110.0	110.0	110.0	110.0	110.0	110.0	110.0
	48	110.0	110.0	110.0	110.0	110.0	110.0	110.0	110.0
	54	99.0	99.0	110.0	110.0	99.0	99.0	110.0	110.0
	60	89.1	89.1	99.4	99.4	89.1	89.1	99.4	99.4
	66	81.0	81.0	90.4	90.4	81.0	81.0	90.4	90.4
	72	74.3	74.3	82.9	82.9	74.3	74.3	82.9	82.9
	78	68.6	68.6	76.5	76.5	68.6	68.6	76.5	76.5
	84	63.7	63.7	71.0	71.0	63.7	63.7	71.0	71.0
96	24	110.0	110.0	110.0	110.0	110.0	110.0	110.0	110.0
	30	110.0	110.0	110.0	110.0	110.0	110.0	110.0	110.0
	36	110.0	110.0	110.0	110.0	110.0	110.0	110.0	110.0
	42	110.0	110.0	110.0	110.0	110.0	110.0	110.0	110.0
	48	97.5	97.5	108.8	108.8	97.5	97.5	108.8	108.8
	54	86.7	86.7	96.7	95.7	86.7	86.7	96.7	96.7
	60	78.0	78.0	87.0	87.0	78.0	76.0	87.0	87.0
	66	70.9	70.9	79.1	79.1	70.9	70.9	79.1	79.1
	72	65.0	65.0	72.5	72.5	65.0	65.0	72.5	72.5
	78	60.0	60.0	66.9	66.9	60.0	60.0	66.9	66.9
	84	55.7	55.7	62.1	62.1	55.7	55.7	62.1	62.1
108	24	110.0	110.0	110.0	110.0	110.0	110.0	110.0	110.0
	30	110.0	110.0	110.0	110.0	110.0	110.0	110.0	110.0
	36	110.0	110.0	110.0	110.0	110.0	110. 0	110.0	110.0
	42	99.0	99.0	110.0	110.0	99.0	99.0	110.0	110.0
	48	86.7	86.7	96.7	96.7	86.7	86.7	96.7	96.7
	54	77.0	77.0	85.9	85.9	77.0	77.0	85.9	85.9
	60	69.3	69.3	77.3	77.3	69.3	69.3	77.3	77.3
	66	63.0	63.0	70.3	70.3	63.0	63.0	70.3	70.3
	72	57.8	57.8	64.4	64.4	57.8	57.8	64.4	64.4
	78	53.3	53.3	59.5	59.5	53.3	53.3	59.5	59.5
120	24	110.0	110.0	110.0	110.0	110.0	110.0	110.0	110.0
	30	110.0	110.0	110.0	110.0	110.0	110.0	110.0	110.0
	36	104.0	104.0	110.0	110.0	104.0	104.0	110.0	110.0
	42	89.1	89.1	99.4	99.4	89.1	89.1	99.4	99.4
	4a	78.0	78.0	87.0	87.0	78.0	78.0	87.0	87.0
	54	69.3	69.3	77.3	77.3	69.3	69.3	77.3	77.3
	60	62.4	62.4	69.6	69.6	62.4	62.4	69.6	69.6
	66	56.7	56.7	63.3	63.3	56.7	56.7	63.3	63.3
	72	52.0	52.0	58.0	58.0	52.0	52.0	58.0	58.0

DESIGN LOAD CAPACITY - PSF									
L IN.	AVG. WIDTH IN.	2 X 6 X 1/8"				2 X 8 X 1/8"			
		1/4" DIA. ULTRACON		5/16" DIA. ULTRACON		1/4" DIA. ULTRACON		5/16" DIA. ULTRACON	
		EXT.(+)	INT.(-)	EXT.(+)	INT.(-)	EXT.(+)	INT.(-)	EXT.(+)	INT.(-)
132	24	110.0	110.0	110.0	110.0	110.0	110.0	110.0	110.0
	30	110.0	110.0	110.0	110.0	110.0	110.0	110.0	110.0
	36	94.5	94.5	102.9	102.9	94.5	94.5	105.5	105.5
	42	81.0	81.0	88.2	88.2	81.0	81.0	90.4	90.4
	48	70.9	70.9	77.2	77.2	70.9	70.9	79.1	79.1
	54	63.0	63.0	68.6	68.6	63.0	63.0	70.3	70.3
	60	56.7	56.7	61.8	61.8	56.7	56.7	63.3	63.3
144	24	110.0	110.0	110.0	110.0	110.0	110.0	110.0	110.0
	30	98.2	98.2	98.2	98.2	104.0	104.0	110.0	110.0
	36	81.9	81.9	81.9	81.9	86.7	86.7	96.7	96.7
	42	70.2	70.2	70.2	70.2	74.3	74.3	82.9	82.9
	48	61.4	61.4	61.4	61.4	65.0	65.0	72.5	72.5
	54	54.6	54.6	54.6	54.6	57.8	57.8	64.4	64.4
	60	49.1	49.1	49.1	49.1	52.0	52.0	58.0	58.0

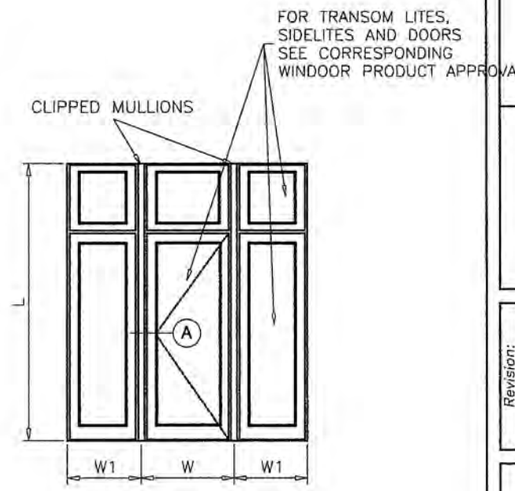

AVG. WIDTH = $\frac{W + W1}{2}$

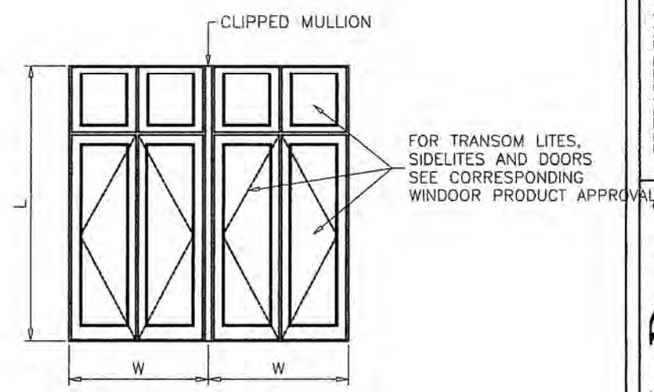

AVG. WIDTH = W

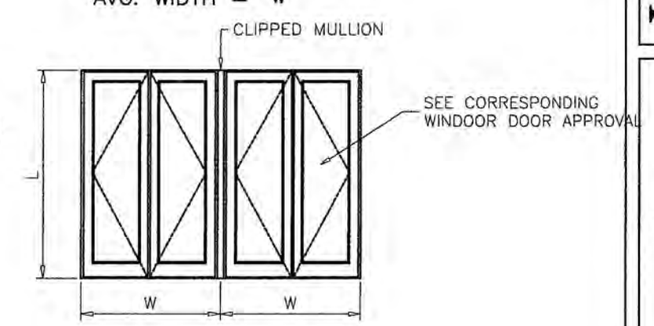

AVG. WIDTH = $\frac{W}{2}$

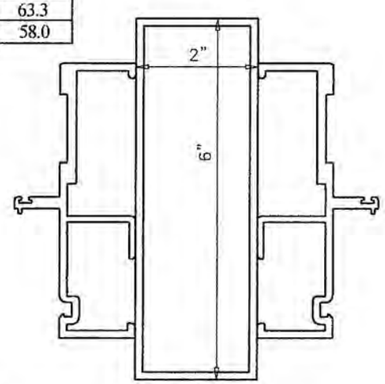

TOTAL PROPERTIES
Ix = 14.183 IN^4
Sx = 4.728 IN^3

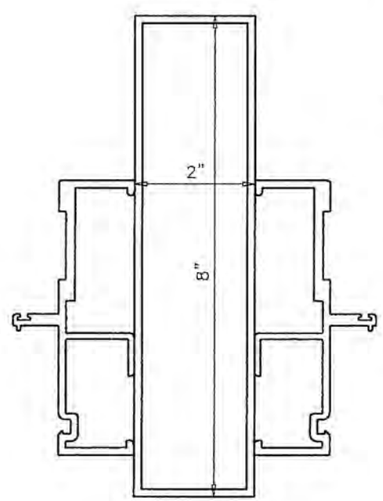

TOTAL PROPERTIES
Ix = 23.357 IN^4
Sx = 5.839 IN^3

LIMIT EXTERIOR LOADS TO +100 PSF FOR INSTALLATIONS WHERE WATER INFILTRATION RESISTANCE IS REQUIRED. SEE CHART ABOVE FOR INSTALLATIONS WHERE WATER INFILTRATION RESISTANCE IS NOT REQUIRED.

PRODUCT REVISED
as complying with the Florida Building Code
NOA–No. 20-0610.16
Expiration Date 10/05/2026
By
Miami–Dade Product Control

Revision:
A) NO CHANGES THIS SHEET.
AK - 06/03/20

PREPARED BY A. LYNN MILLER
1070 TECHNOLOGY DRIVE
N. VENICE, FL 34275
(941) 480-1600
REGISTRATION #29296

WINDOOR®
INCORPORATED
104 TRIPLE DIAMOND BLVD
NORTH VENICE, FL 34275
(407) 481-8400

Series	Title	Desc.	Scale	Sheet	DWG No.	Drawn By	Date	Rev.
450MULL	450 CLIPPED MULLION	MULLION LOAD CHARTS	NTS	8 OF 9	MD-450MULL	AGK	06/03/20	A

ANTHONY LYNN MILLER
LICENSE
No. 58705
6/5/20
STATE OF FLORIDA
PROFESSIONAL ENGINEER

A. LYNN MILLER, P.E.
P.E.# 58705

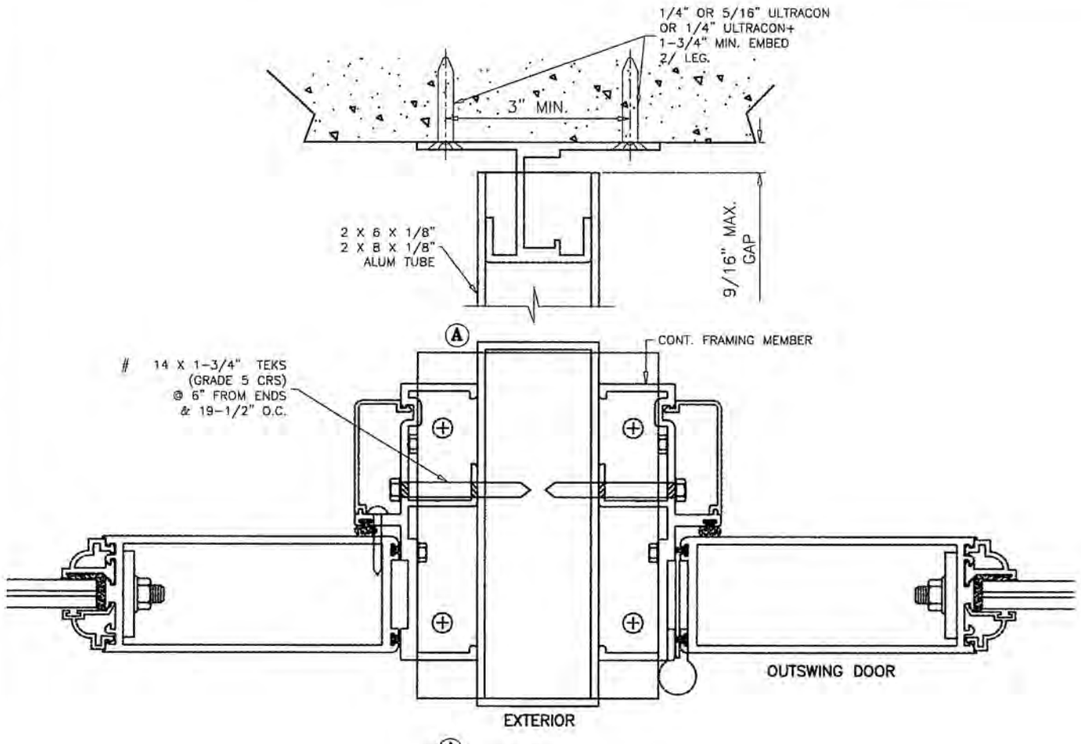

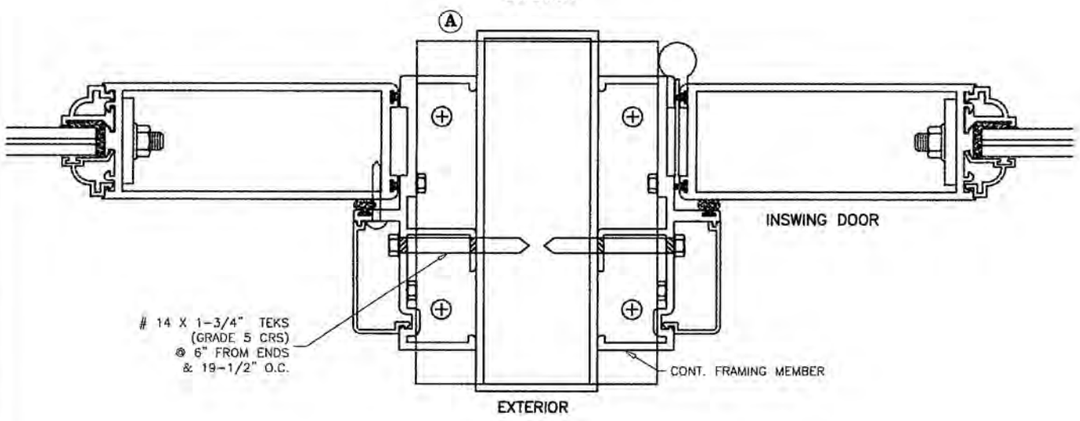

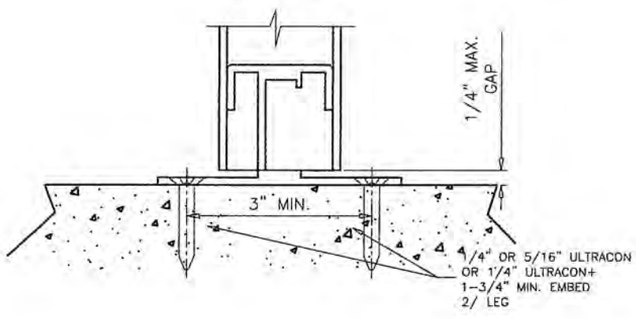

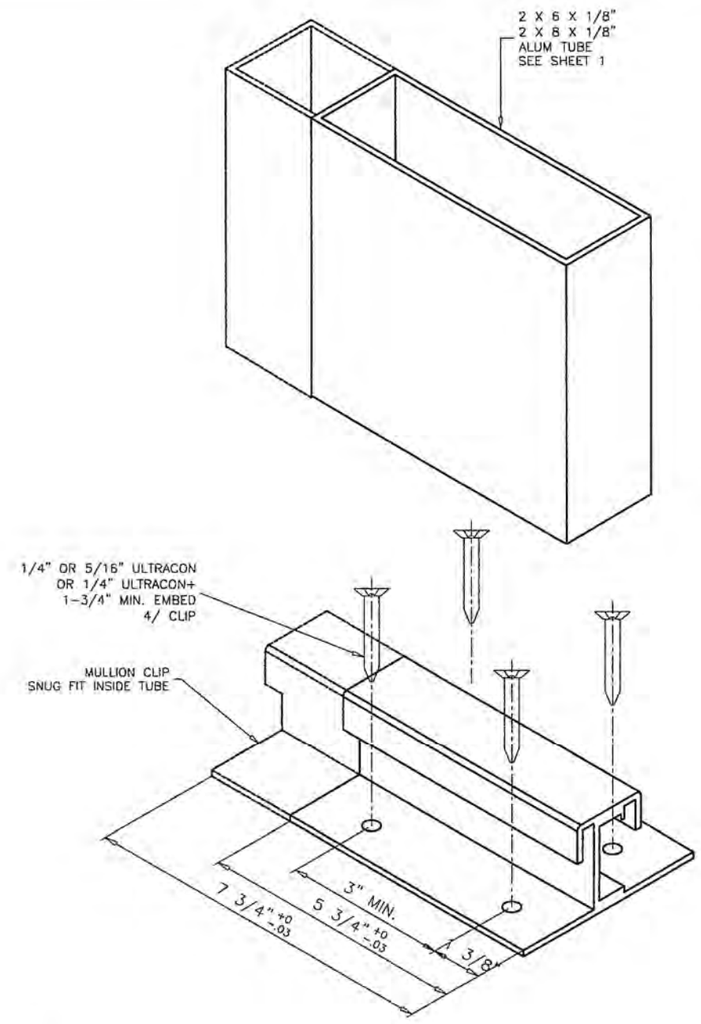

NOTES:

1/4" DIA. ULTRACON BY 'ELCO' (Fu=177 KSI, Fy=155 KSI)
2-1/2" MIN. EDGE DISTANCE

1/4" DIA. ULTRACON+ BY 'DEWALT' (Fu=164 KSI, Fy=148 KSI)
2-1/2" MIN. EDGE DISTANCE

5/16" DIA. ULTRACON BY 'ELCO/DEWALT' (Fu=177 KSI, Fy=155 KSI)
3-1/4" MIN. EDGE DISTANCE

CONCRETE f'c = 3000 PSI MIN.

PRODUCT REVISED
as complying with the Florida Building Code
NOA-No. 20-0610.16
Expiration Date 10/05/2026
By
Miami-Dade Product Control

Revision:
A) ADDED ULTRACON+ ANCHORS.
AK - 06/03/20

PREPARED BY A. LYNN MILLER
1070 TECHNOLOGY DRIVE
N. VENICE, FL 34275
(941) 480-1600
REGISTRATION #29296

WINDOOR®
INCORPORATED
104 TRIPLE DIAMOND BLVD
NORTH VENICE, FL 34275
(407) 481-8400

Series	Title	Desc.	Scale	Sheet	DWG No.	Drawn By	Date	Rev.
450MULL	450 CLIPPED MULLION	INSTALLATION DETAILS, ANCHORS	NTS	9 OF 9	MD-450MULL	AGK	06/03/20	A

ANTHONY LYNN MILLER
LICENSE
No. 58705
STATE OF FLORIDA
PROFESSIONAL ENGINEER
6/5/20

A. LYNN MILLER, P.E.
P.E.# 58705